FARO BARCELONA

ANGA

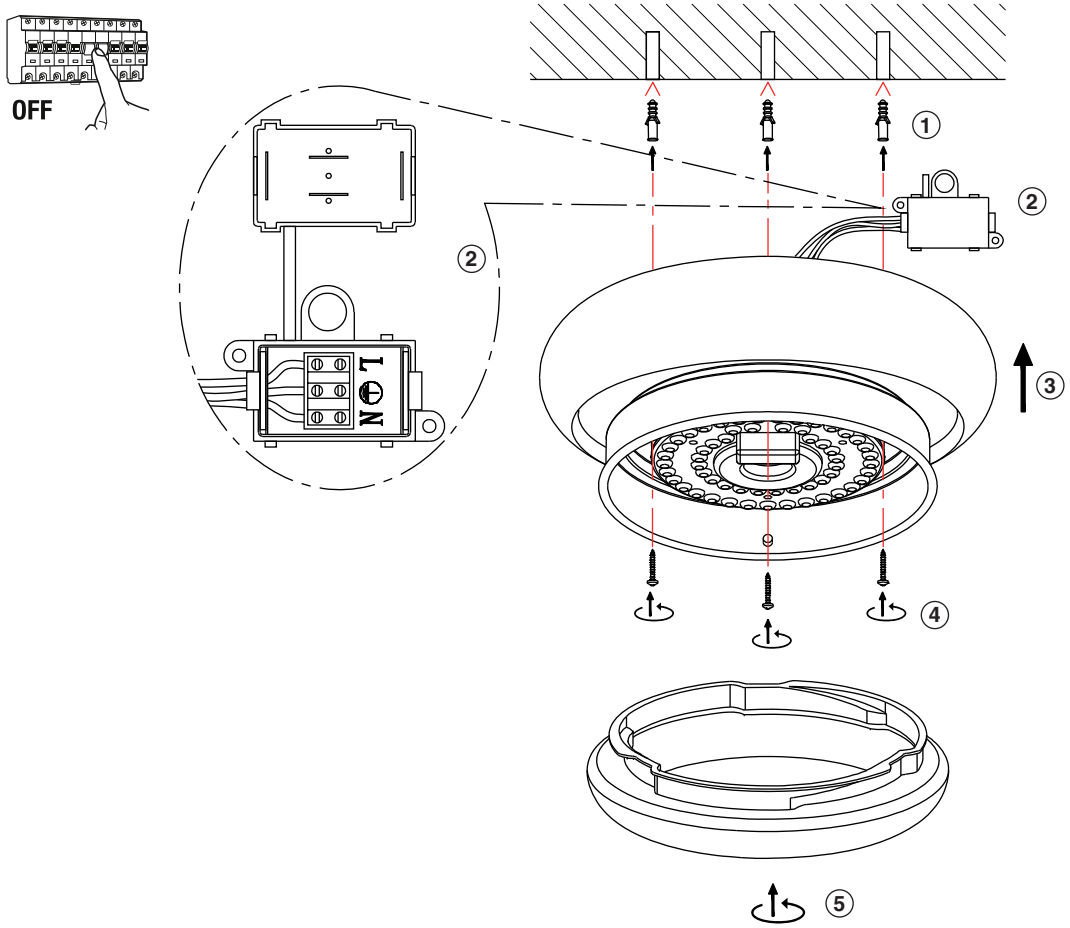

TECHNICAL FEATURES

Ref. 72352, 72353: AC LED 18W 2700K

Ref. 72354, 72355: AC LED 24W 2700K

IP44

E

This product contains a light source of energy efficiency class E

Este producto contiene una fuente luminosa de la clase eficiencia energética E

Together we take care of the planet